REVISIONS				
ZONE	LTR	DESCRIPTION	DATE	APPROVED
	–	INITIAL RELEASE PER SE009697		

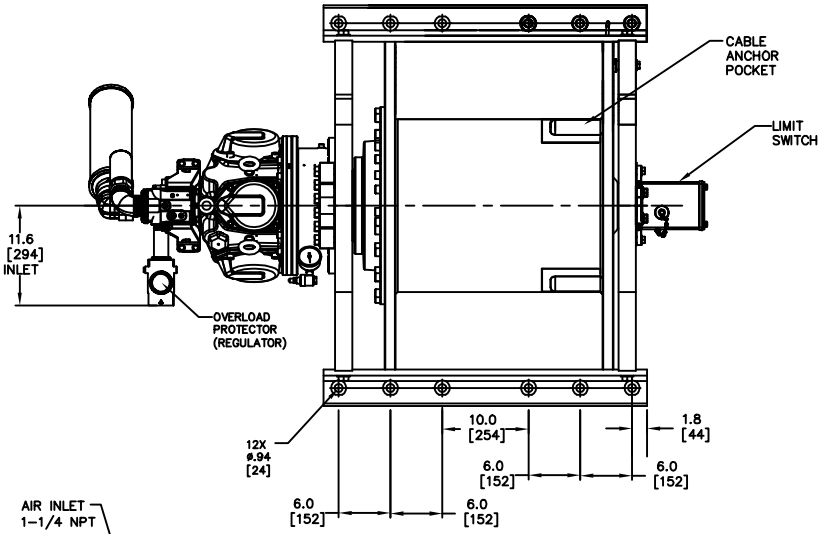

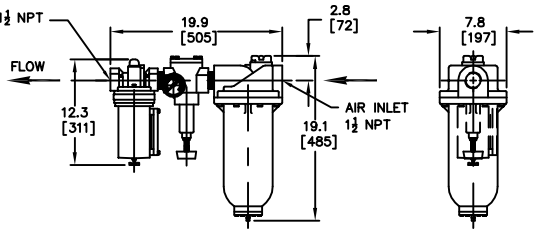

LUBRICATOR/REGULATOR/FILTER

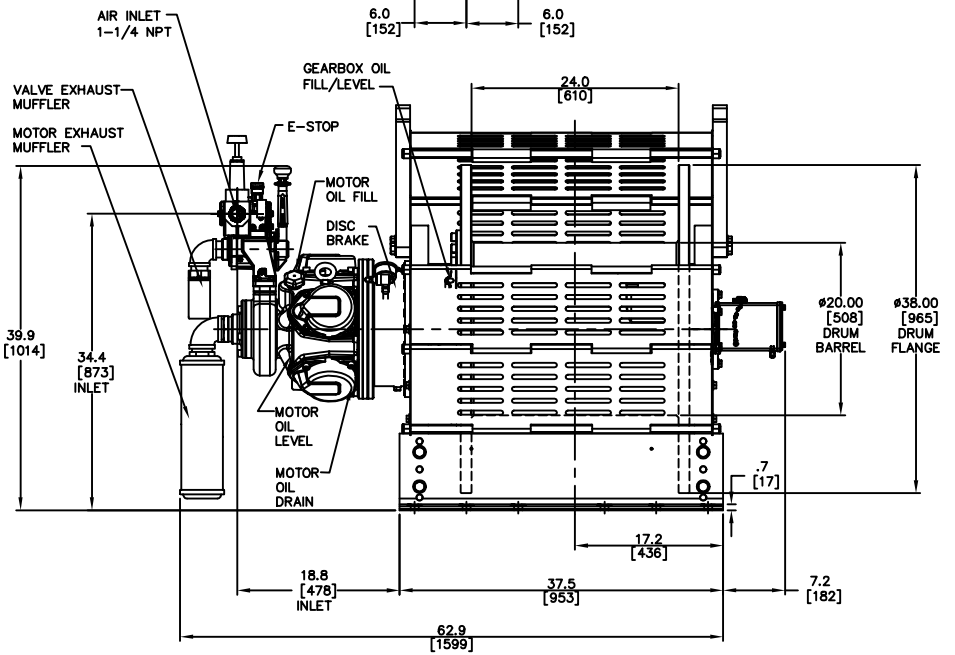

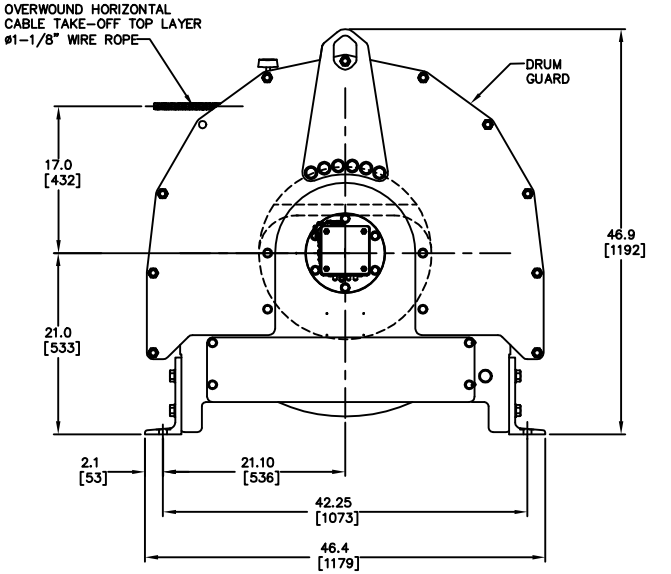

NOTES:

1. DIMENSIONS SHOWN ARE IN INCHES
DIMENSIONS IN BRACKETS [] ARE mm.
2. GUARDING REMOVE FROM TOP VIEW FOR CLARITY

PERFORMANCE SPECIFICATIONS:

RATED LINE PULL: 22,000 lbs [10,000 kg] ± TOP LAYER
RATED LINE SPEED: 23 fpm [7 m/min] ± TOP LAYER
INLET PRESSURE: 90 psi [6.3 bar] RUNNING
AVERAGE AIR CONSUMPTION: 800 scfm [22.7 m3/min]

ITEM	QTY	SIZE	PART NO	DESCRIPTION

THIS DOCUMENT CONTAINS CONFIDENTIAL AND TRADE SECRET INFORMATION. IS THE PROPERTY OF INGERSOLL-RAND COMPANY, AND IS GIVEN TO THE RECEIVER IN CONFIDENCE. THE RECEIPT OF RECEIPTS AND RETENTION OF THE DOCUMENT ACCEPTS THE DOCUMENT IN CONFIDENCE AND AGREES THAT, EXCEPT AS AUTHORIZED IN WRITING BY INGERSOLL-RAND COMPANY, IT WILL (1) NOT USE THE DOCUMENT OR ANY COPY THEREOF OR THE INFORMATION, OR TRADE SECRET INFORMATION THEREIN (2) NOT COPY THE DOCUMENT, (3) NOT DISCLOSE TO OTHERS EITHER THE DOCUMENT OR THE INFORMATION, OR TRADE SECRET INFORMATION THEREIN, AND (4) UPON COMPLETION OF THE NEED TO RETAIN THE DOCUMENT, OR UPON DEMAND, RETURN THE DOCUMENT, ALL COPIES THEREOF, AND ALL MATERIAL GIVEN THEREFROM.

WARNING: The export or reexport of this drawing or a product produced by this drawing is subject to U. S. Export Administration Regulations and other applicable governmental restrictions or regulations.

Copyright © 2011 Ingersoll-Rand Company All Rights Reserved

Ingersoll-Rand Company
Tool & Hoist Division
Seattle, WA. U.S.A.

UNLESS OTHERWISE SPECIFIED TOLERANCES ON DIMENSIONS ARE DECIMALS:
2 PLACES (.XX) = ± .02
3 PLACES (.XXX) = ± .005
ANGLES: ± 0.5°
BREAK EDGES .010
SURF 125

THIRD ANGLE PROJECTION

DRAWN	SDG	DATE 10/13/11
CHECKED		
APPROVED		
ENG APPVL	SRB	10/13/11

TITLE
WINCH, AIR
OUTLINE/DIMENSIONAL
FA10i-24XK1C2M2J123-CE

SIZE	PART NO.	DWG NO.	REV
C		382-36589	–

SCALE: 1:8 SHEET 1 OF 1

DWG NO. 382-36589 SH 1